HOT WATER FIREPLACE INSERT AQUATIC WH V 70
IN ACCORDANCE WITH EN 13 229

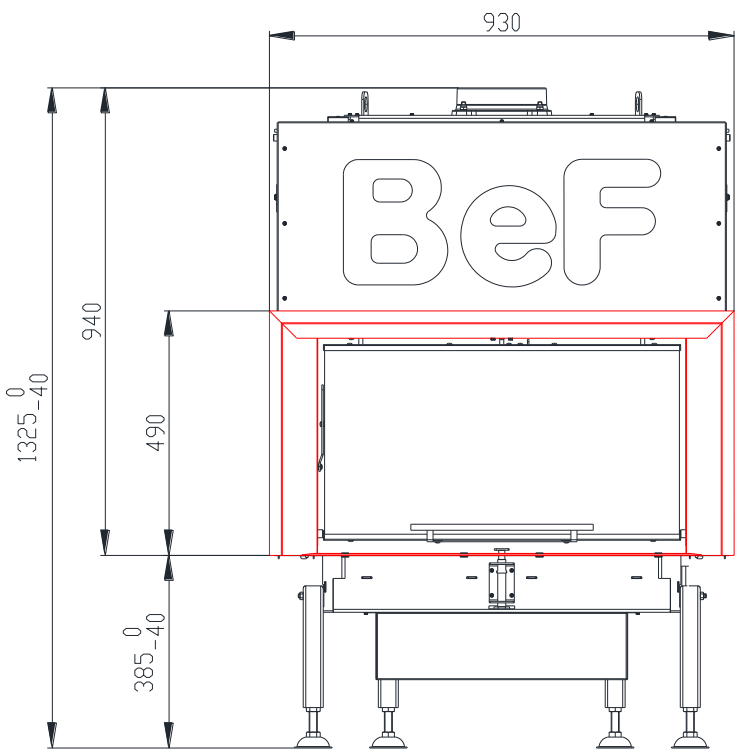

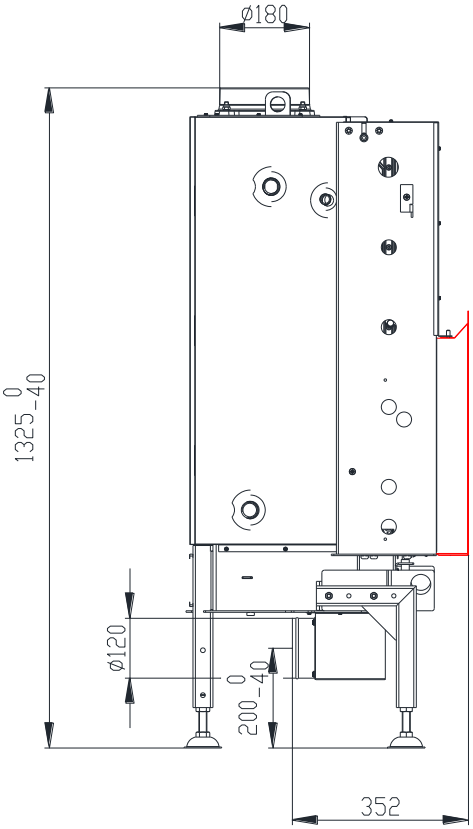

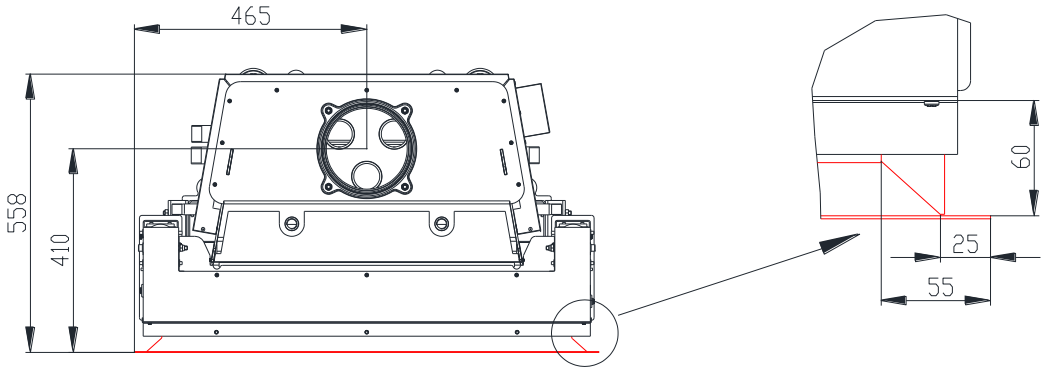

HOT WATER FIREPLACE INSERT AQUATIC WH V 70 IN ACCORDANCE WITH EN 13 229

Technical data:

Nominal heat output	kW	10
Efficiency	%	87
Output into water	kW	8
Volume flow of combustion products	g/s	9,2
Flue-gas temperature	^{o}C	169
Min. feed pressure at nominal heat output	Pa	12
Fuel		wood (beech logs)
Fuel consumption per hour	kg/h	2,96
CO emission in burnt gas (in relation to 13% O2)	%	0,091
Dust in flue-gas (in relation to 13% O2)	mg/Nm^3	29
Smoke flue diameter	mm	180
Weight	kg	247

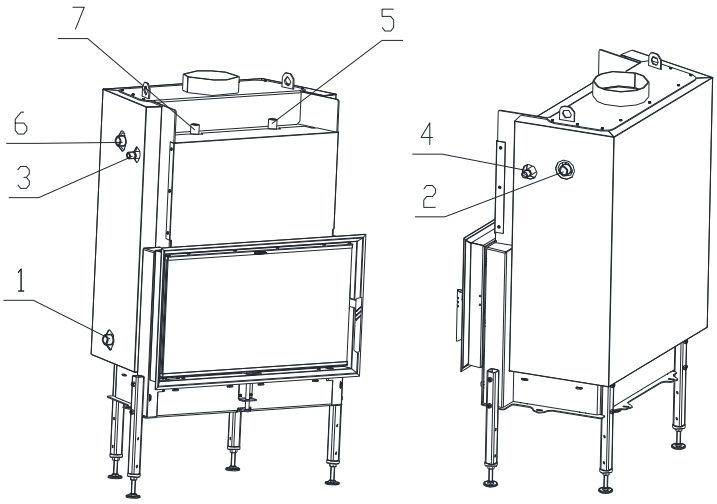

1 – Cold water input into water exchanger (reverse), external thread 1“
2 – Warm water output from water exchanger (rising pipe), external thread 1“
3 – Cold water input for coolant loop, external thread1/2“
4 – Warm water output from coolant loop, external thread 1/2“
5 – Input for air bleed valve, internal thread 1/2“
6 – Thermic security sensor, external thread 1“
7 – Pressure valve, internal thread 1/2“

Set of carcon firebox:

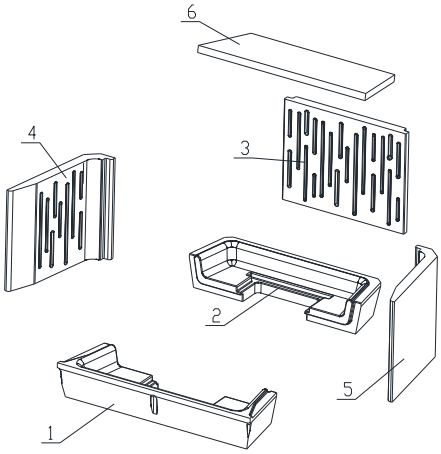

List of spare parts:

1. **Bottom**
2. **Bottom**
3. **Back**
4. **Side piece**
5. **Side piece**
6. **Deflector**
7. **Cast iron grate**
8. **Ashtray**

For details see Installation and Service Instructions.